ENHET

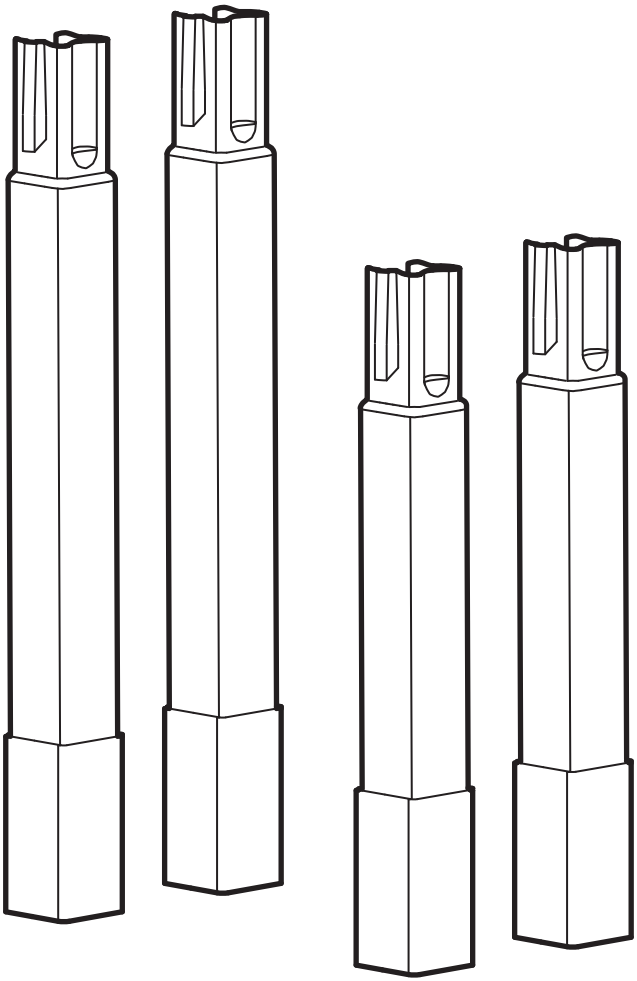

Design and Quality
IKEA of Sweden

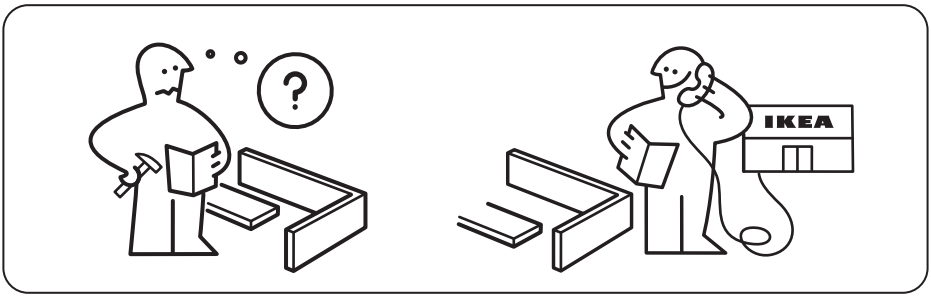

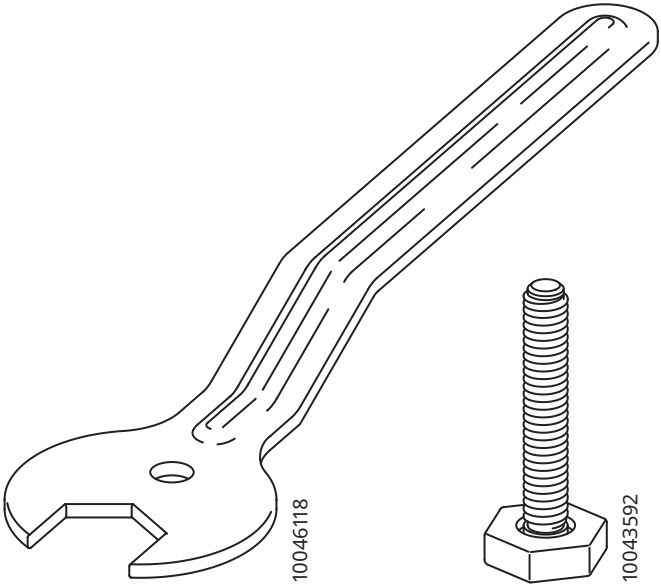

1x 2x

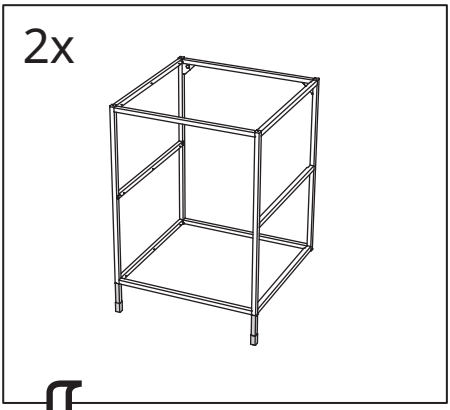

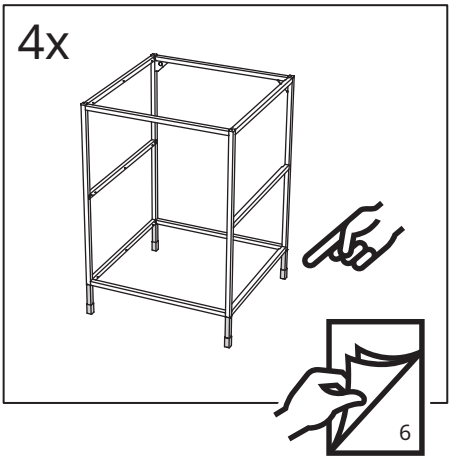

1

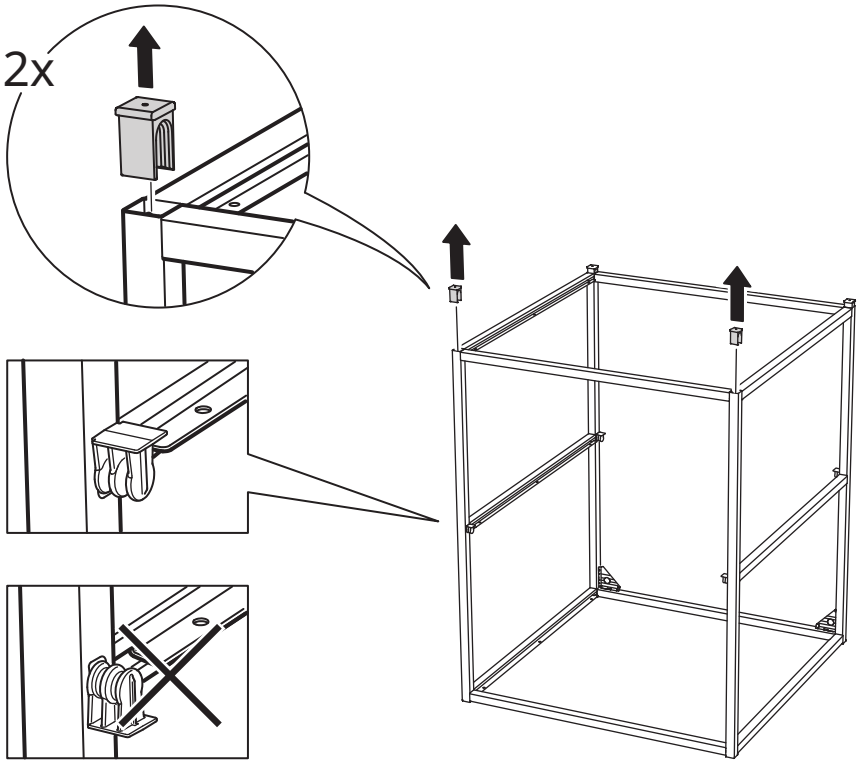

2

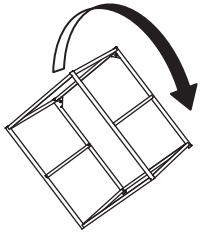

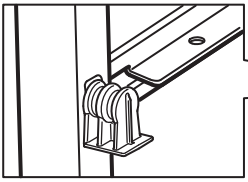

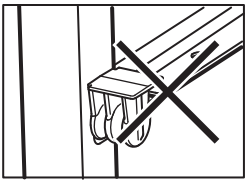

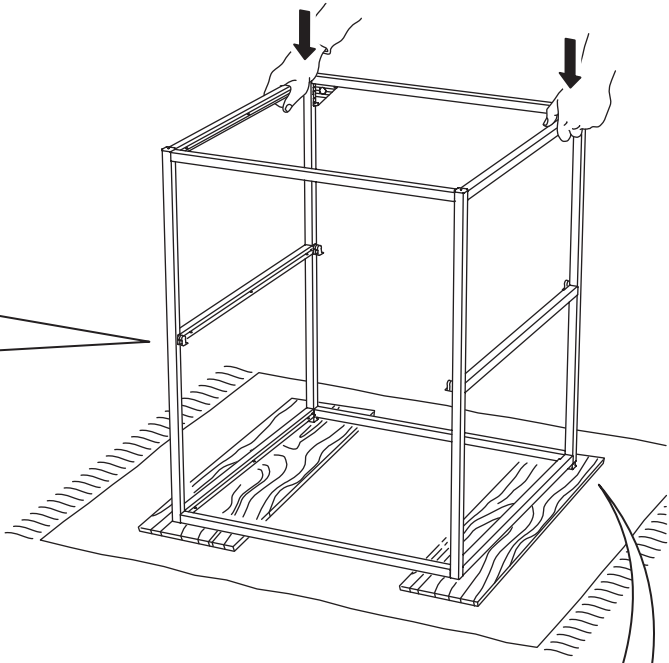

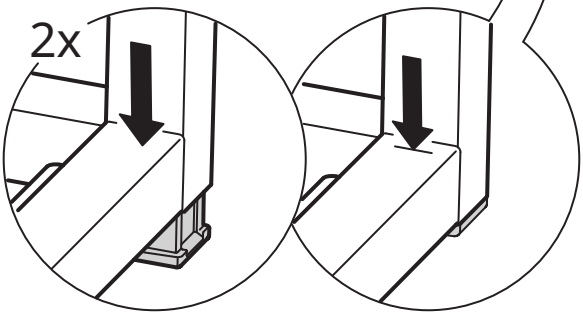

3

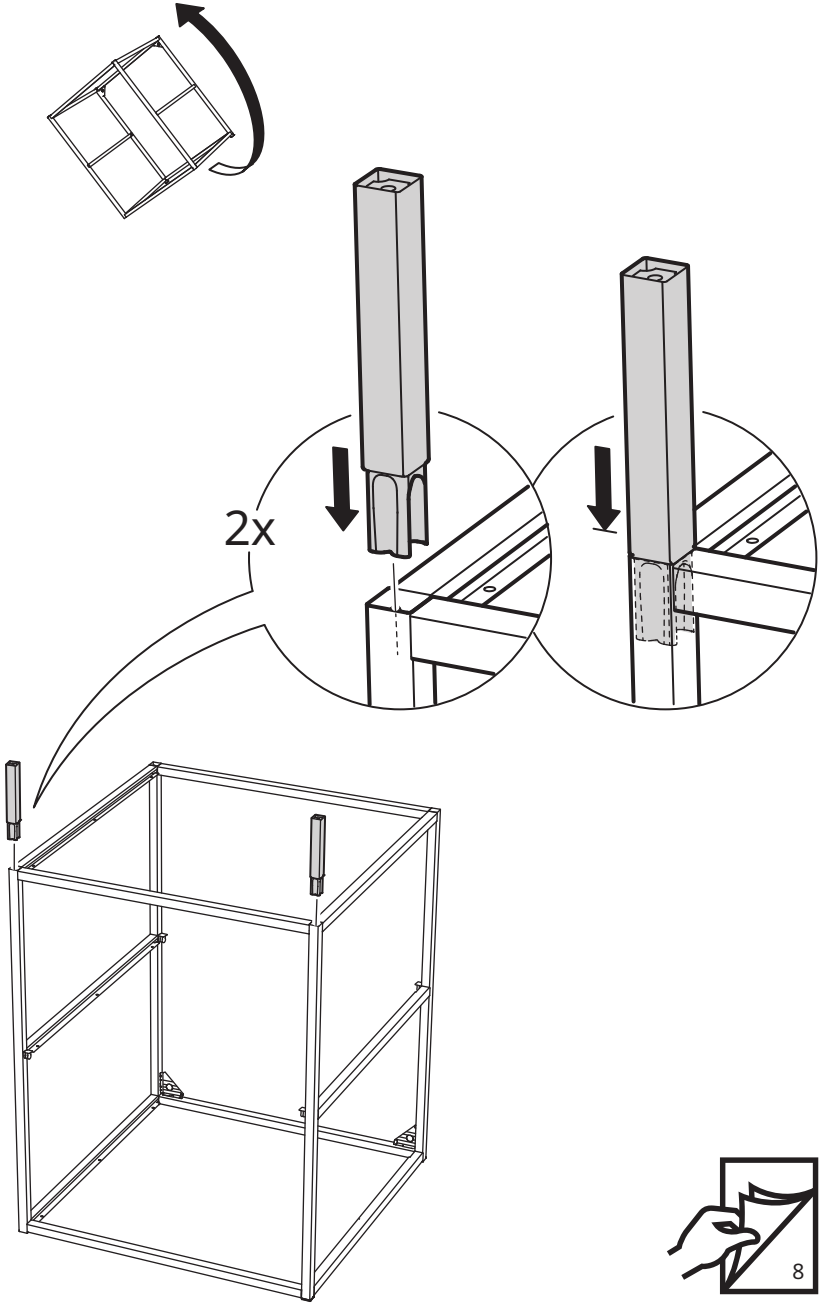

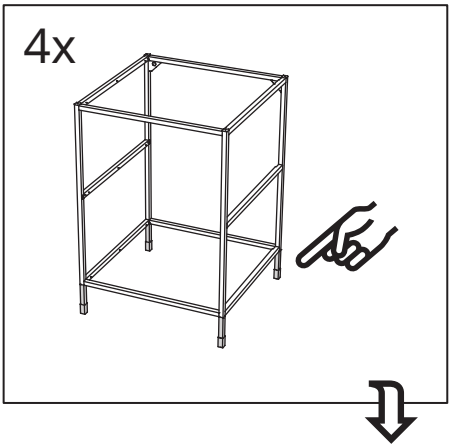

1

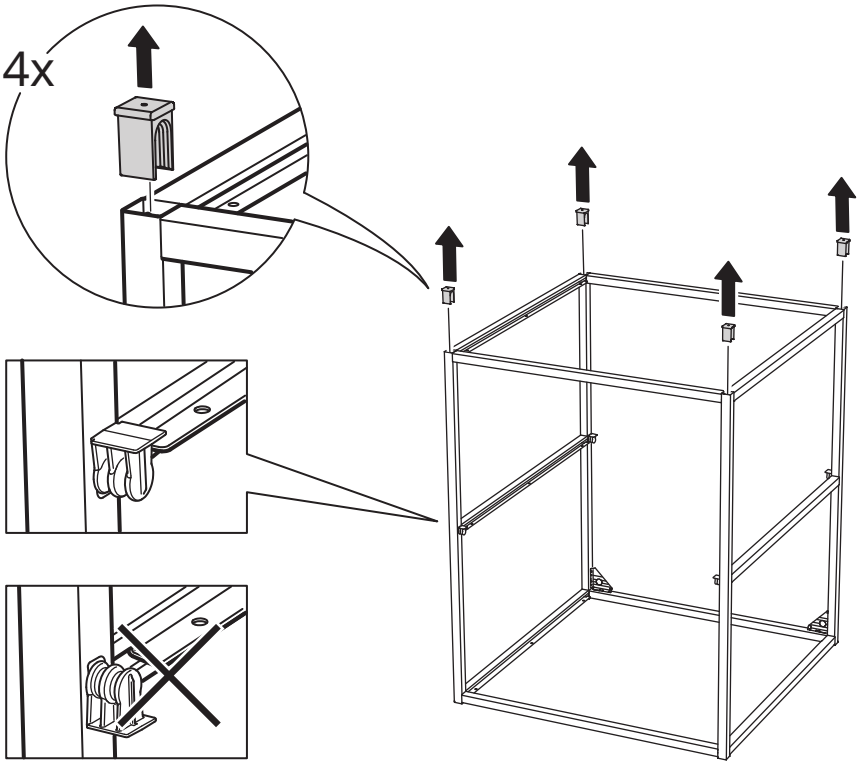

2

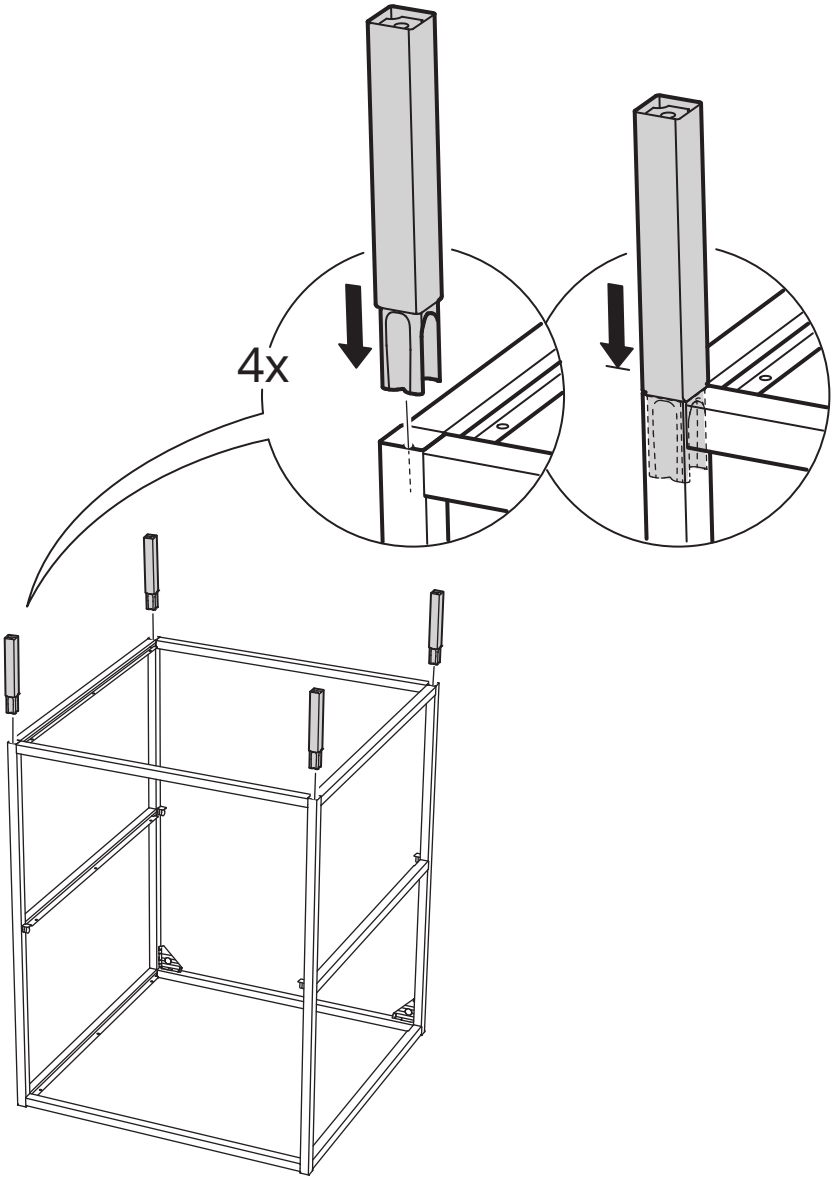

3

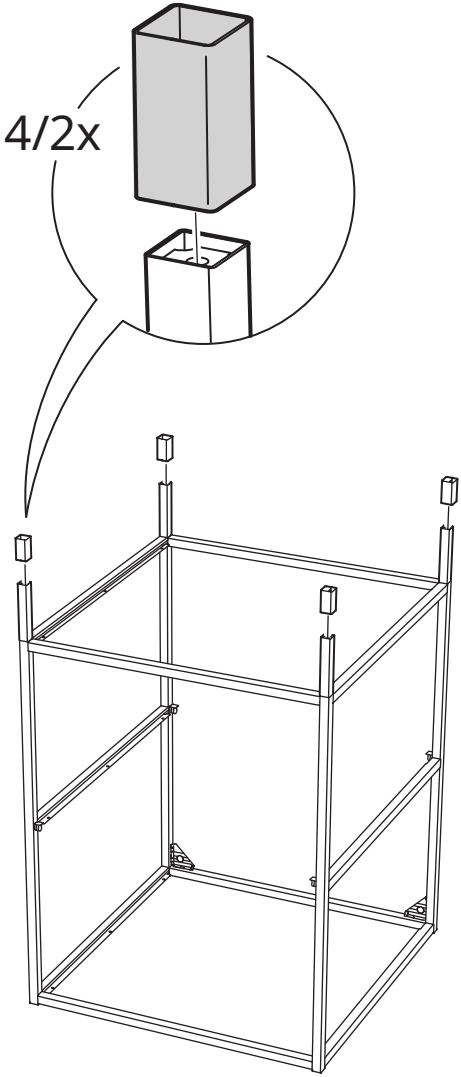

4

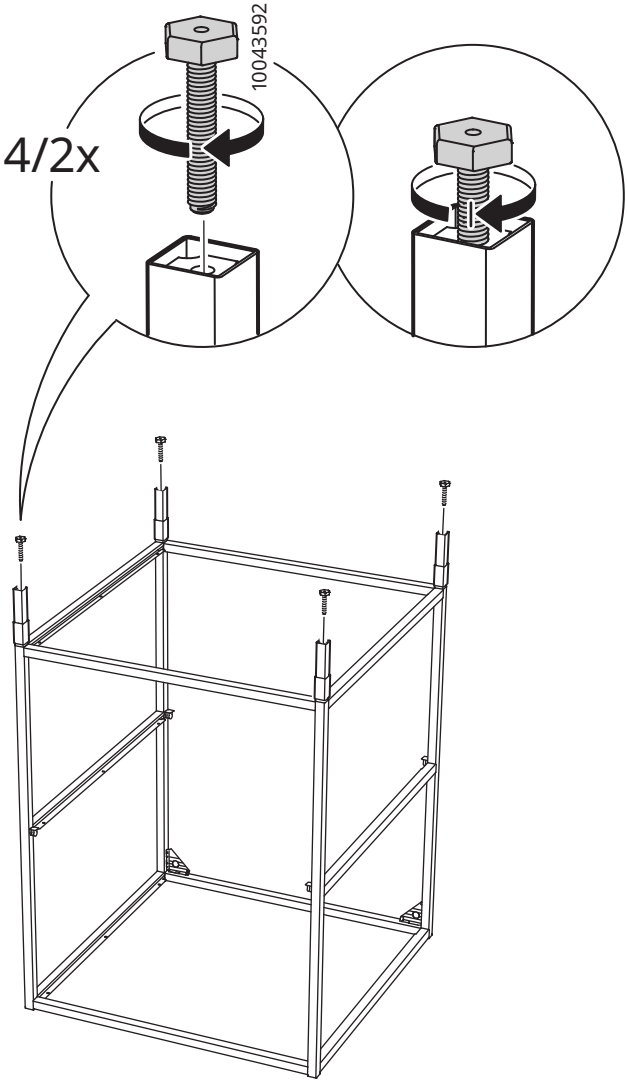

5

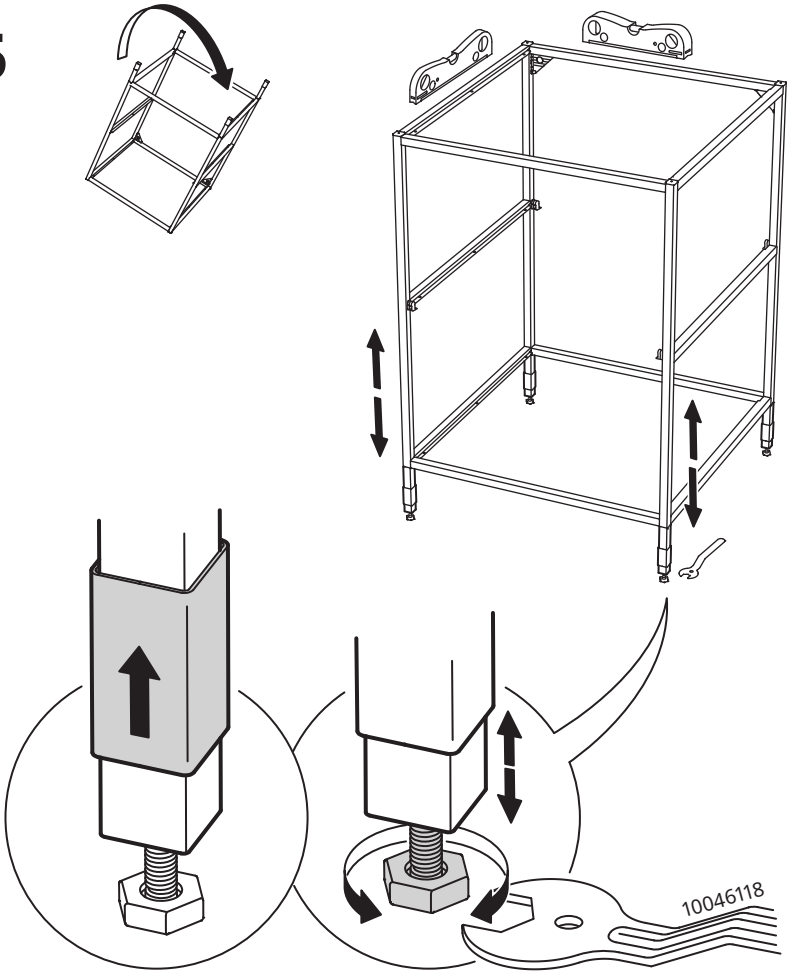

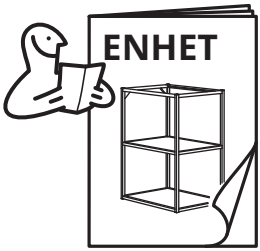

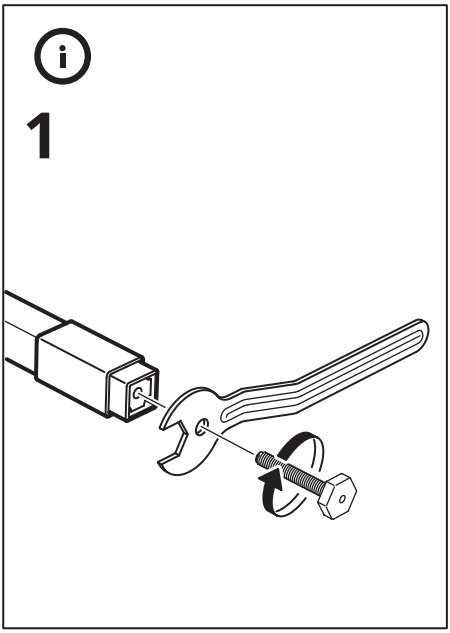
1

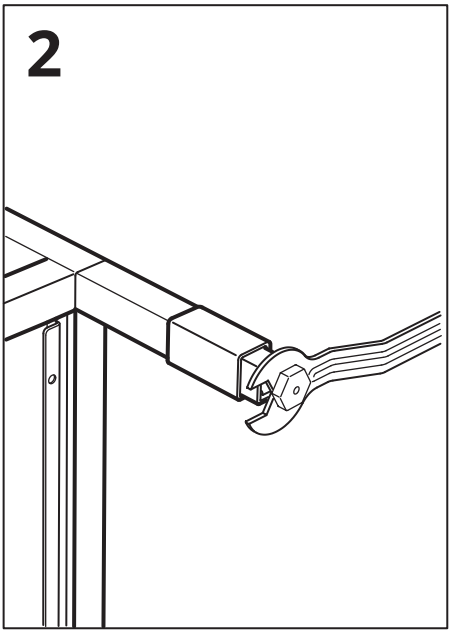
2

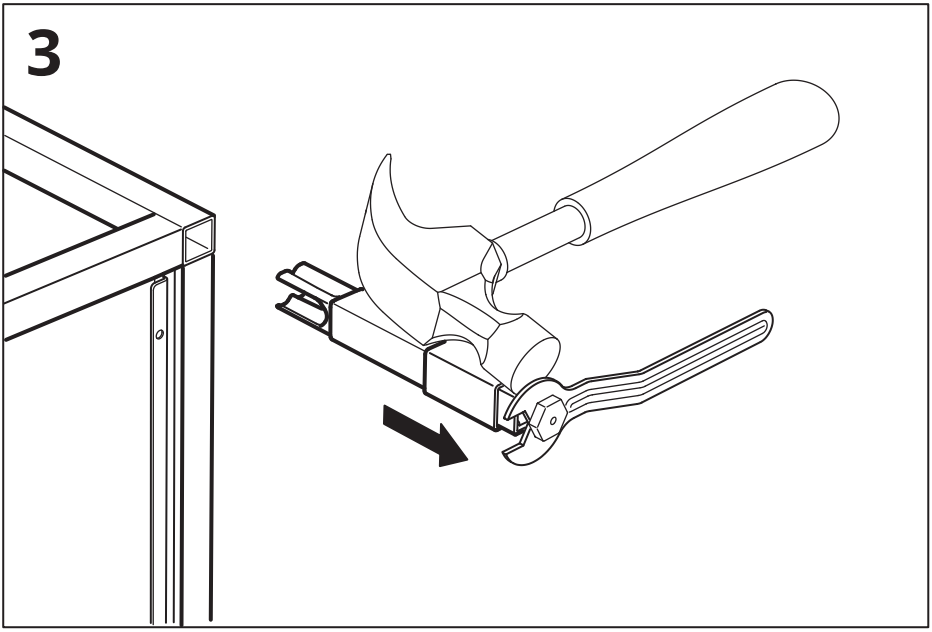
3

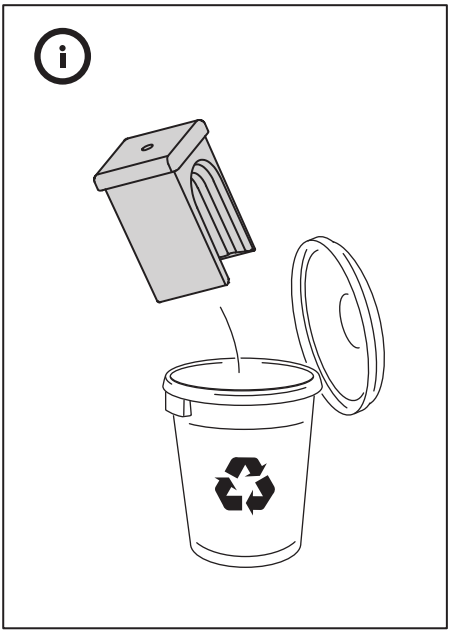

© Inter IKEA Systems B.V. 2019
2020-01-13 AA-2192586-3