Design and Quality
IKEA of Sweden

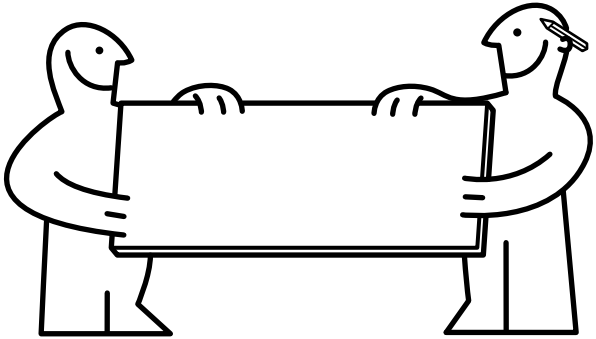

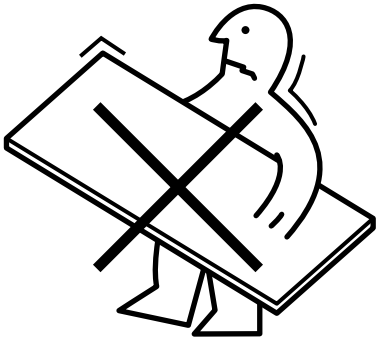

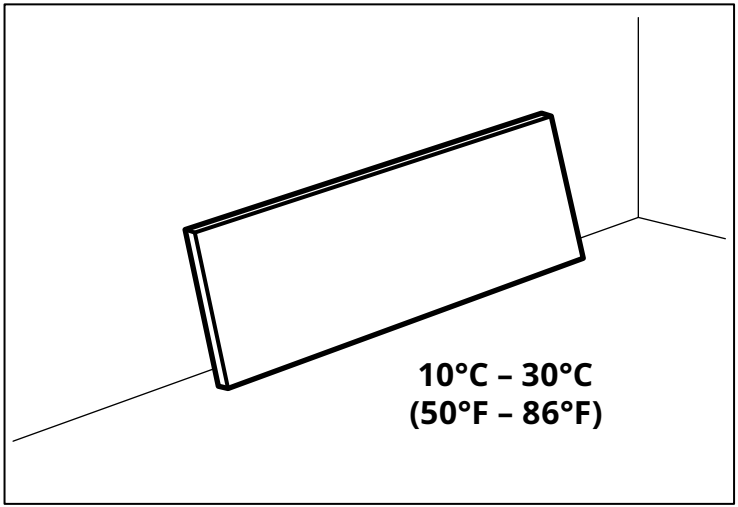

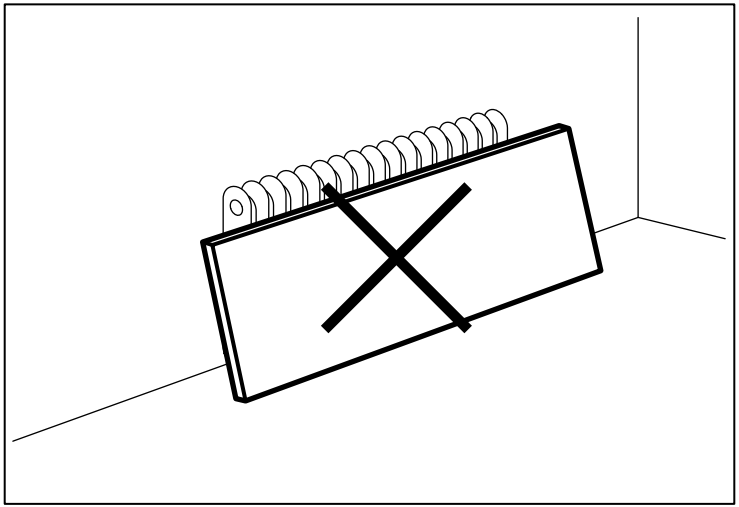

© Inter IKEA Systems B.V. 2009