Design and Quality
IKEA of Sweden

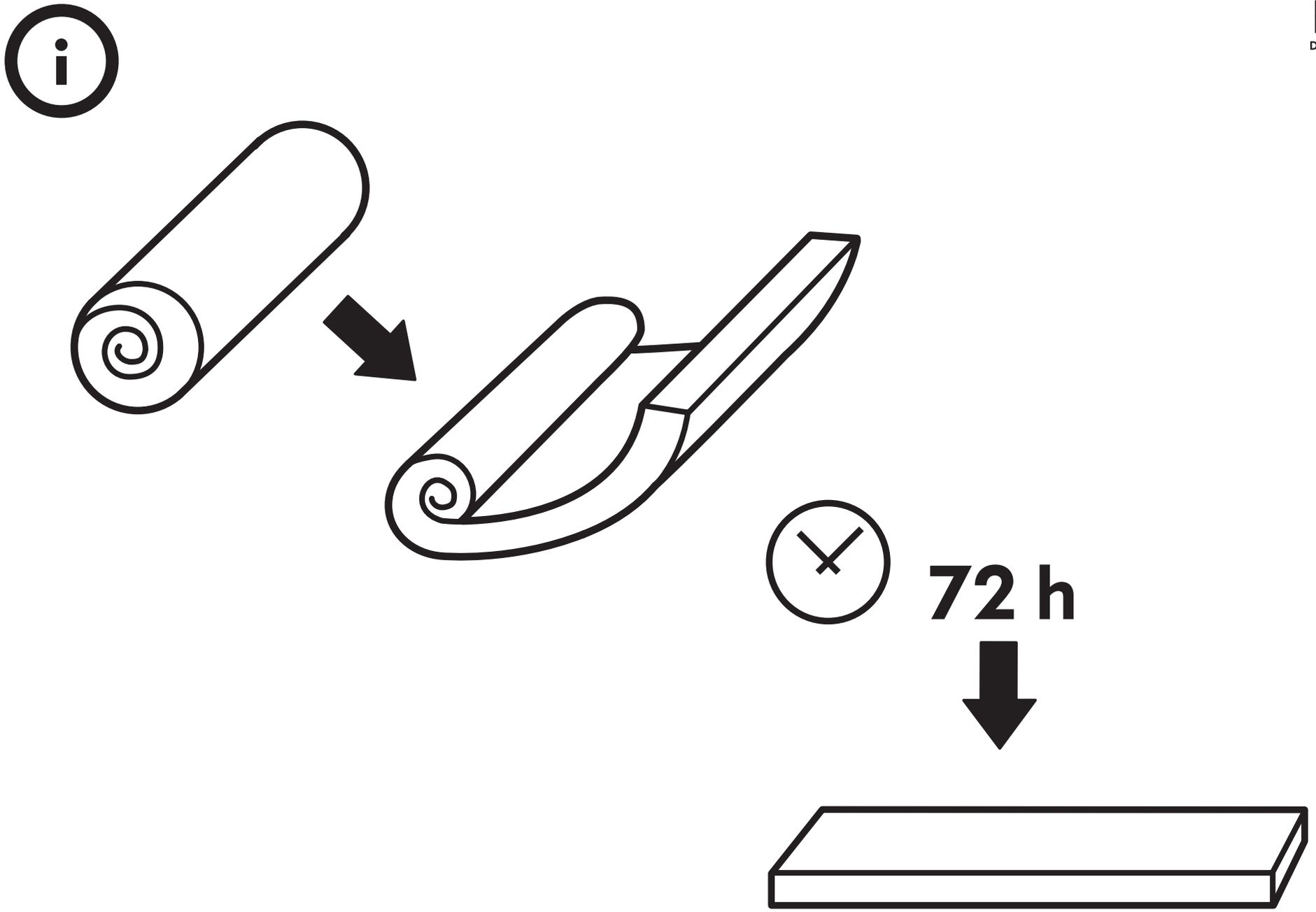

© Inter IKEA Systems B.V. 2010 AA-500304-1