TROFAST

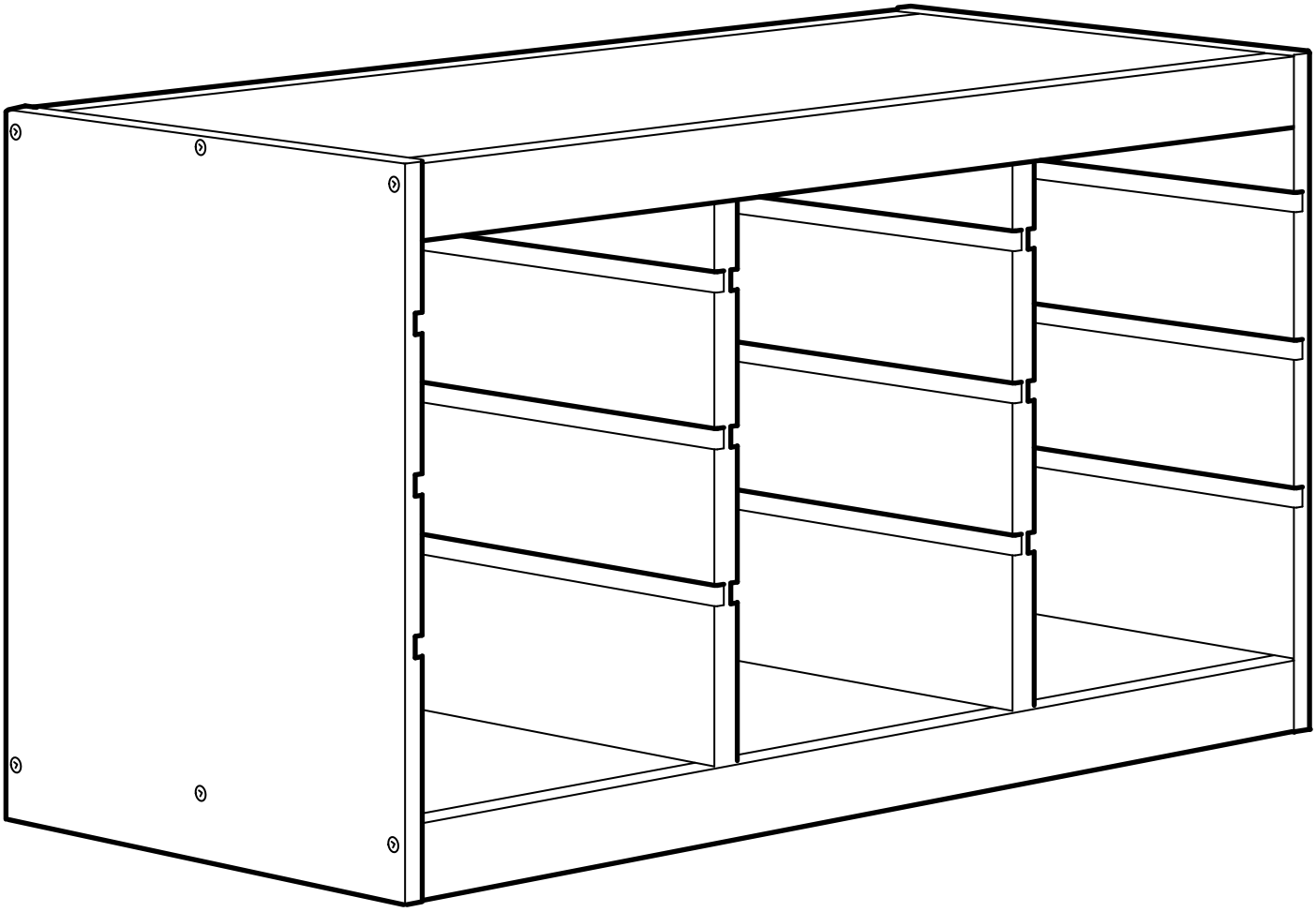

Design and Quality
IKEA of Sweden

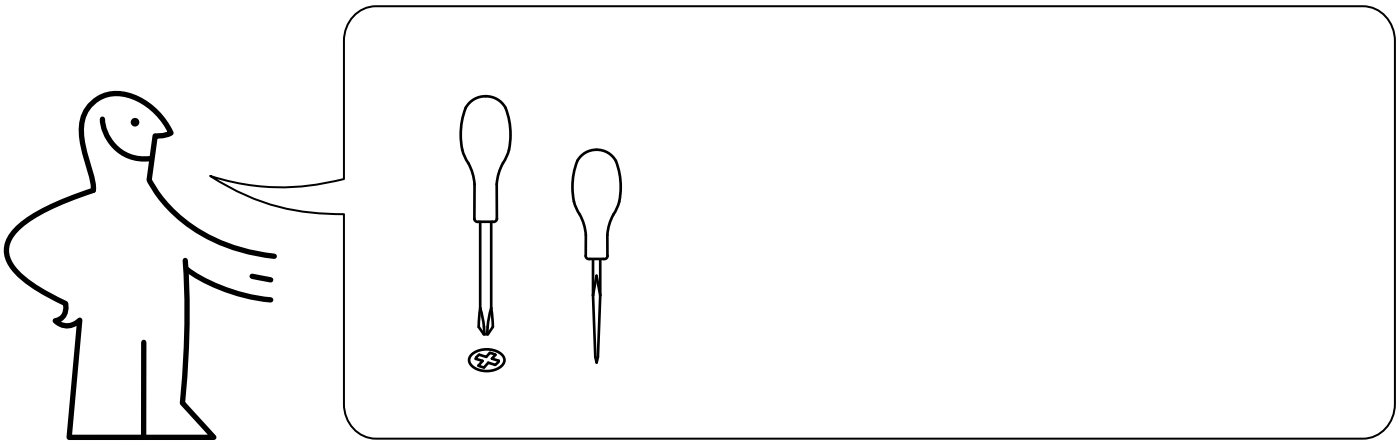

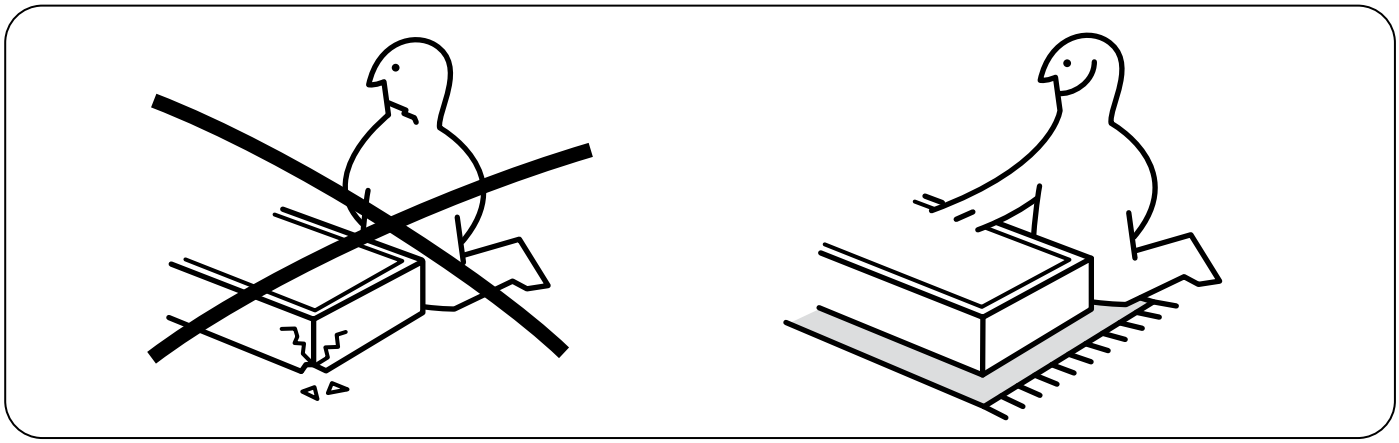

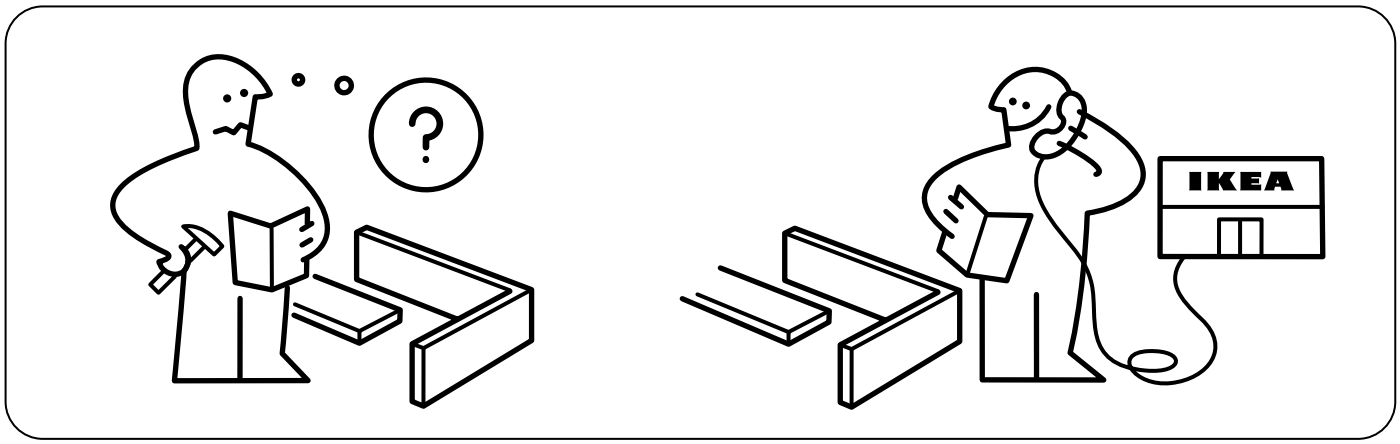

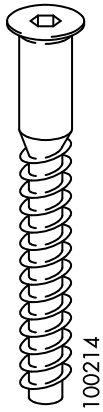

16x

32x

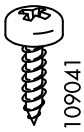

8x

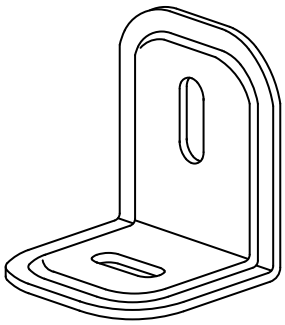

4x

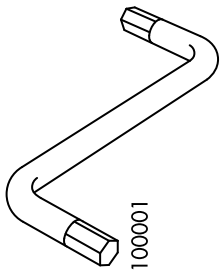

1x

1

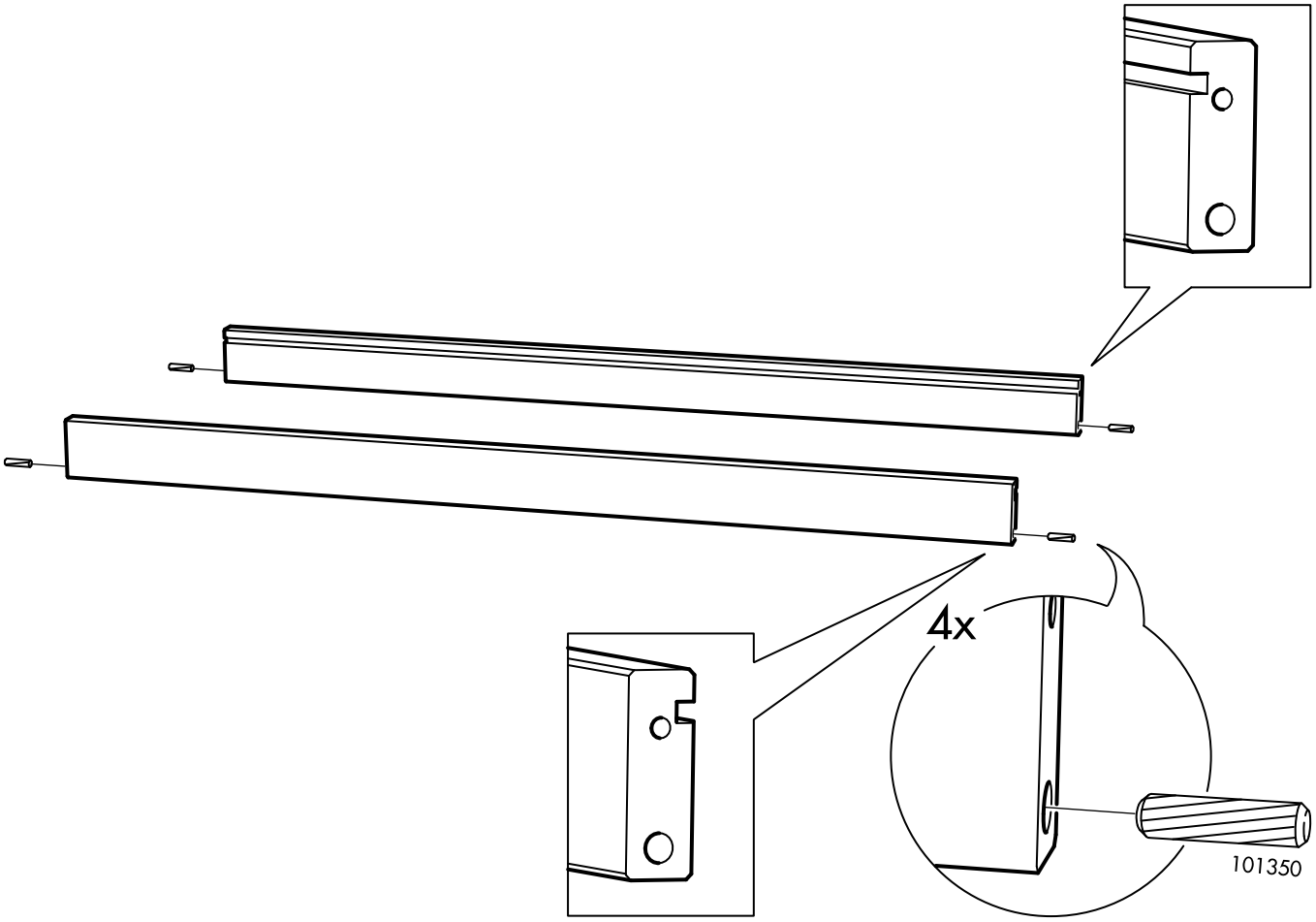

2

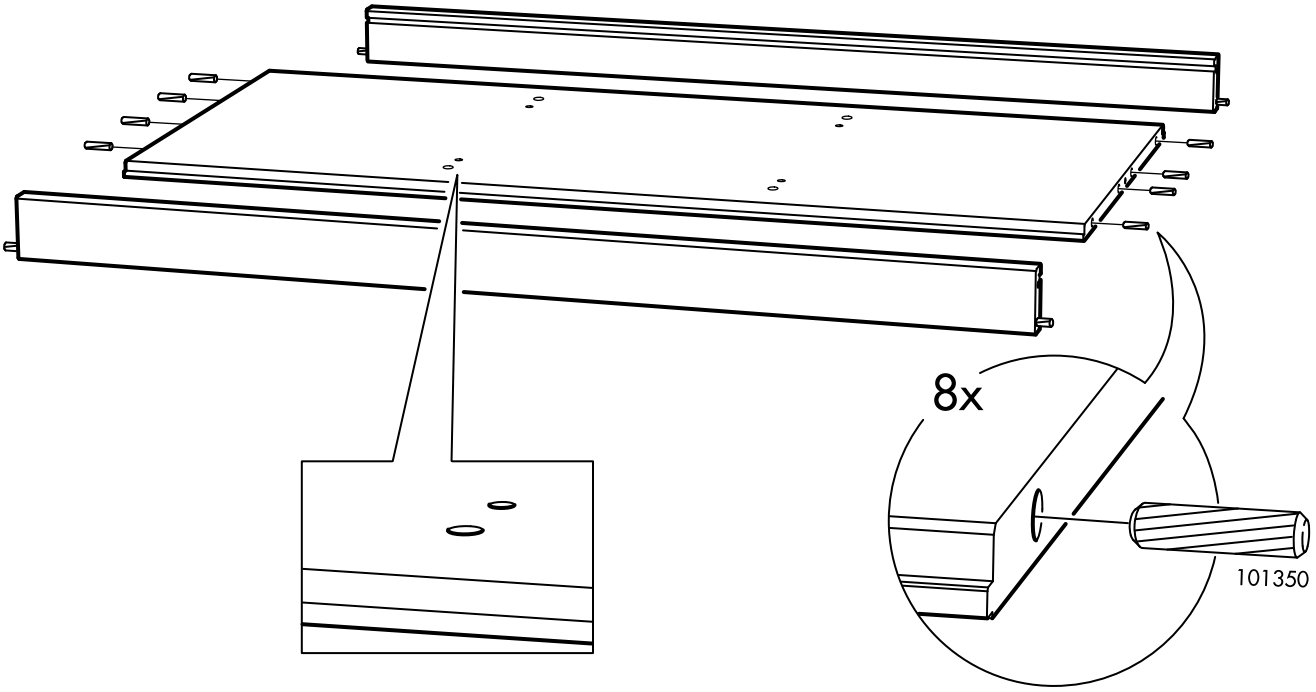

3

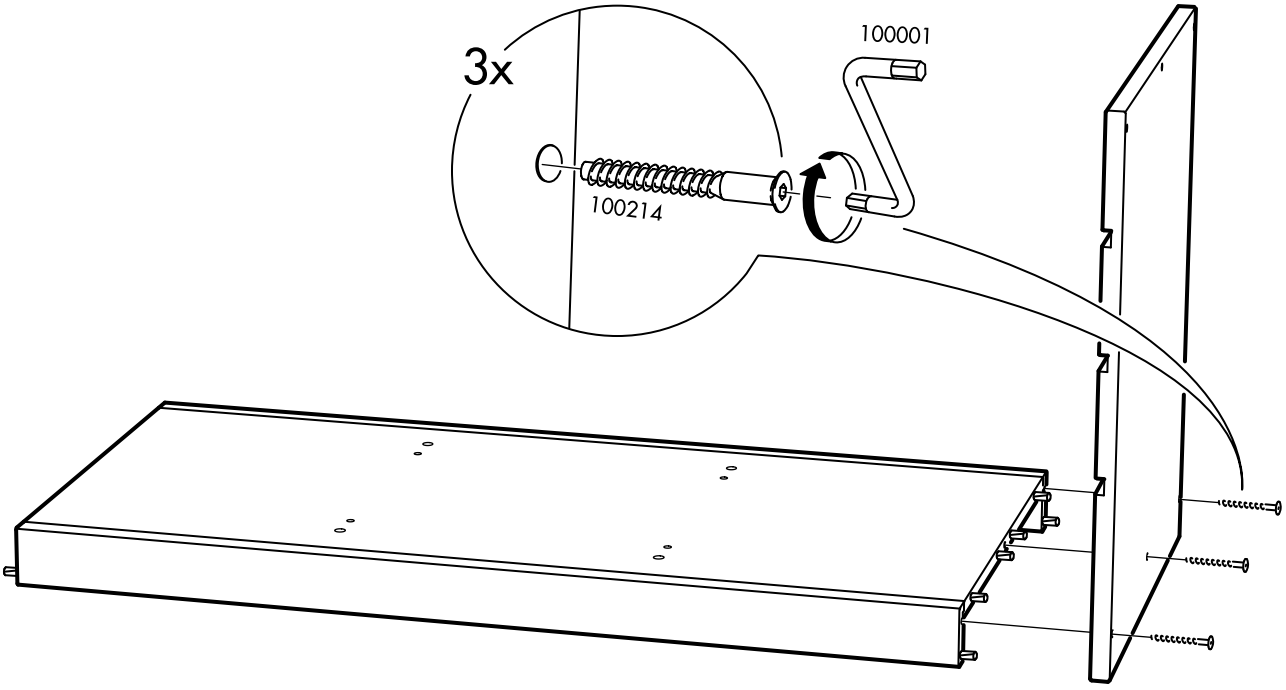

4

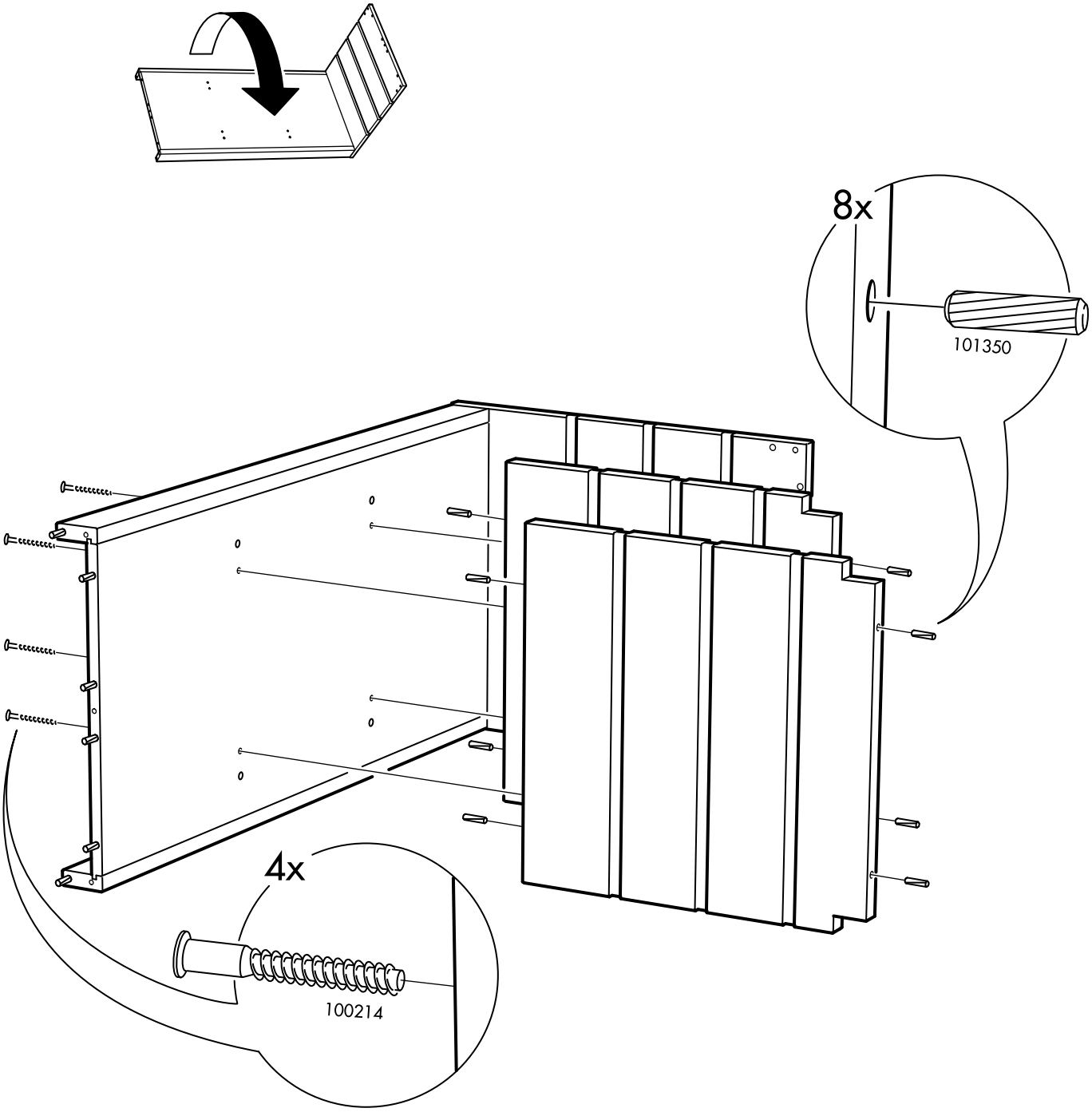

5

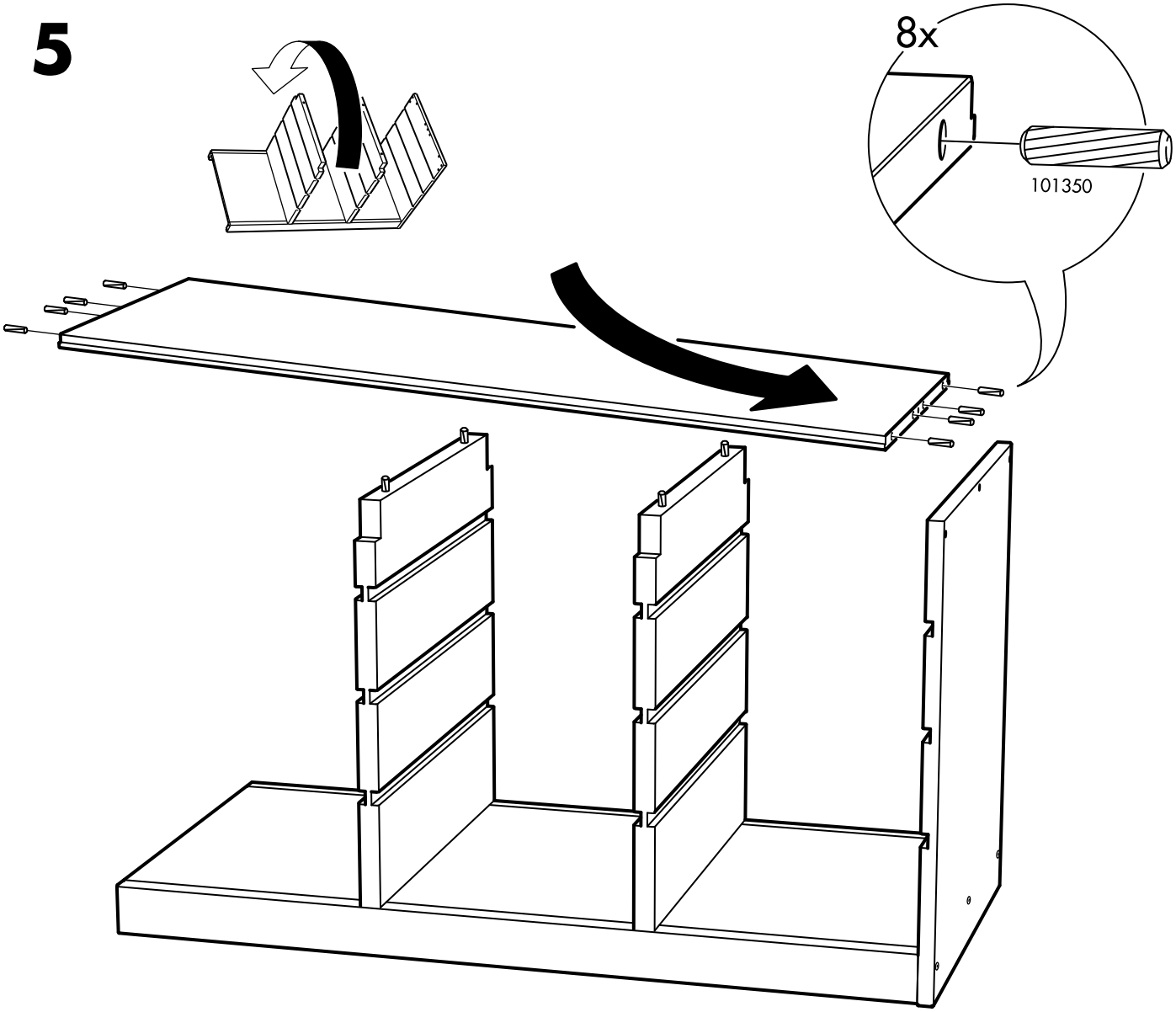

6

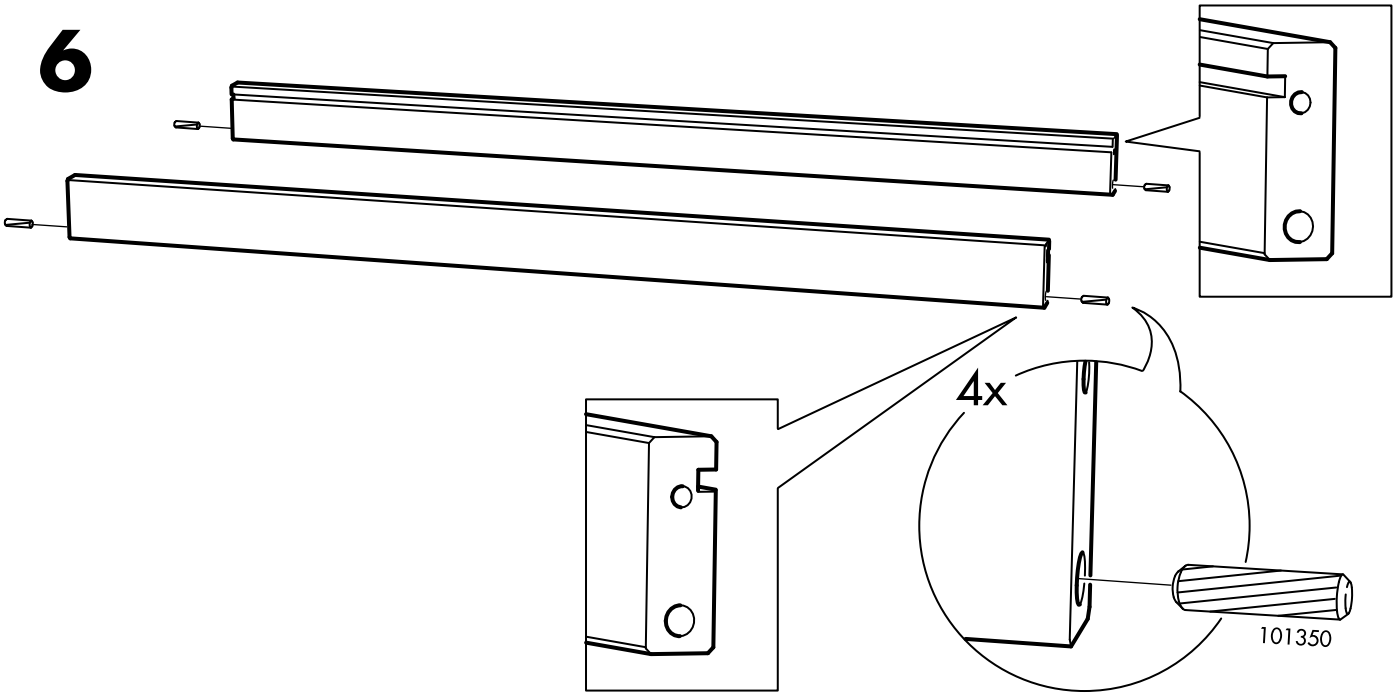

7

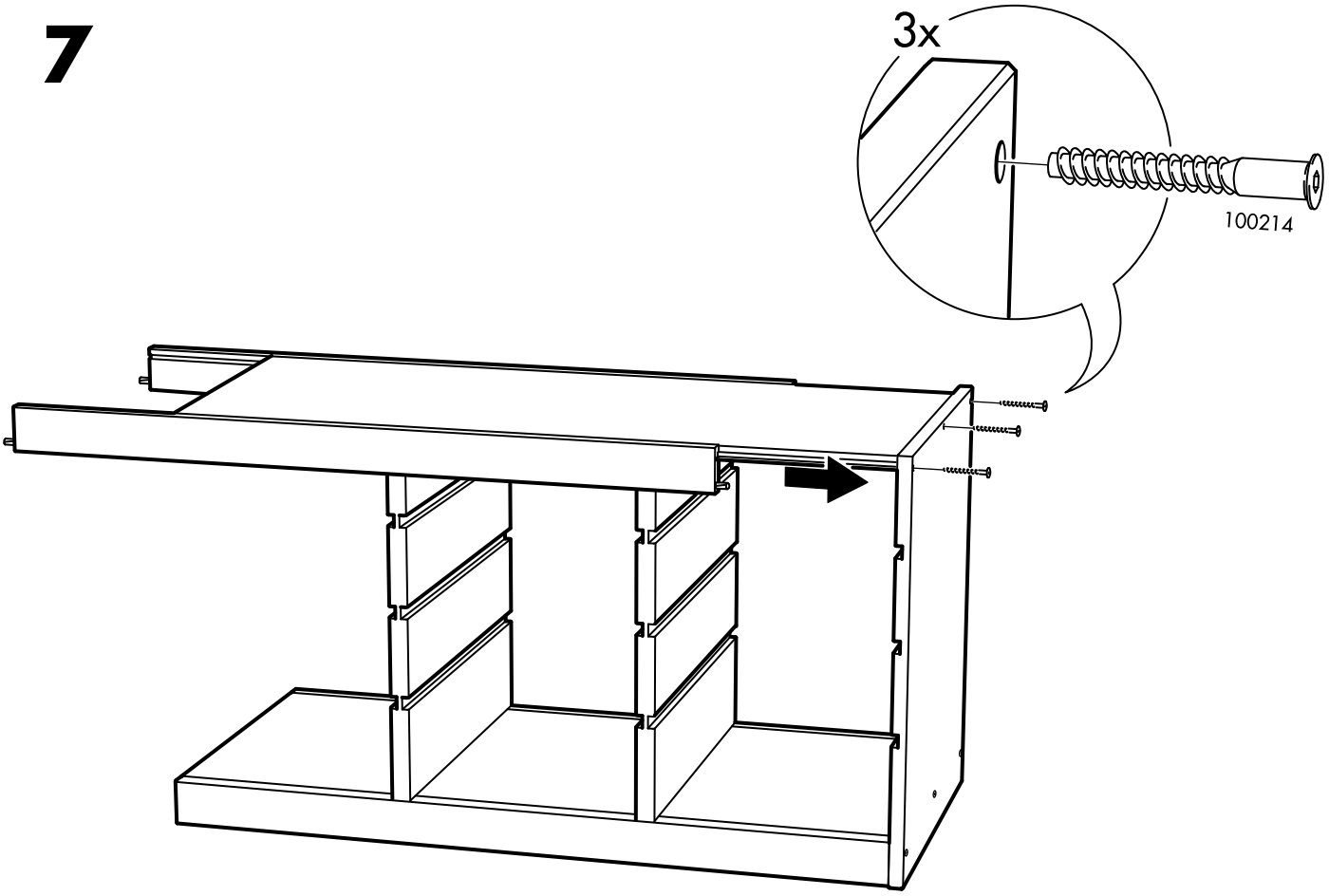

8

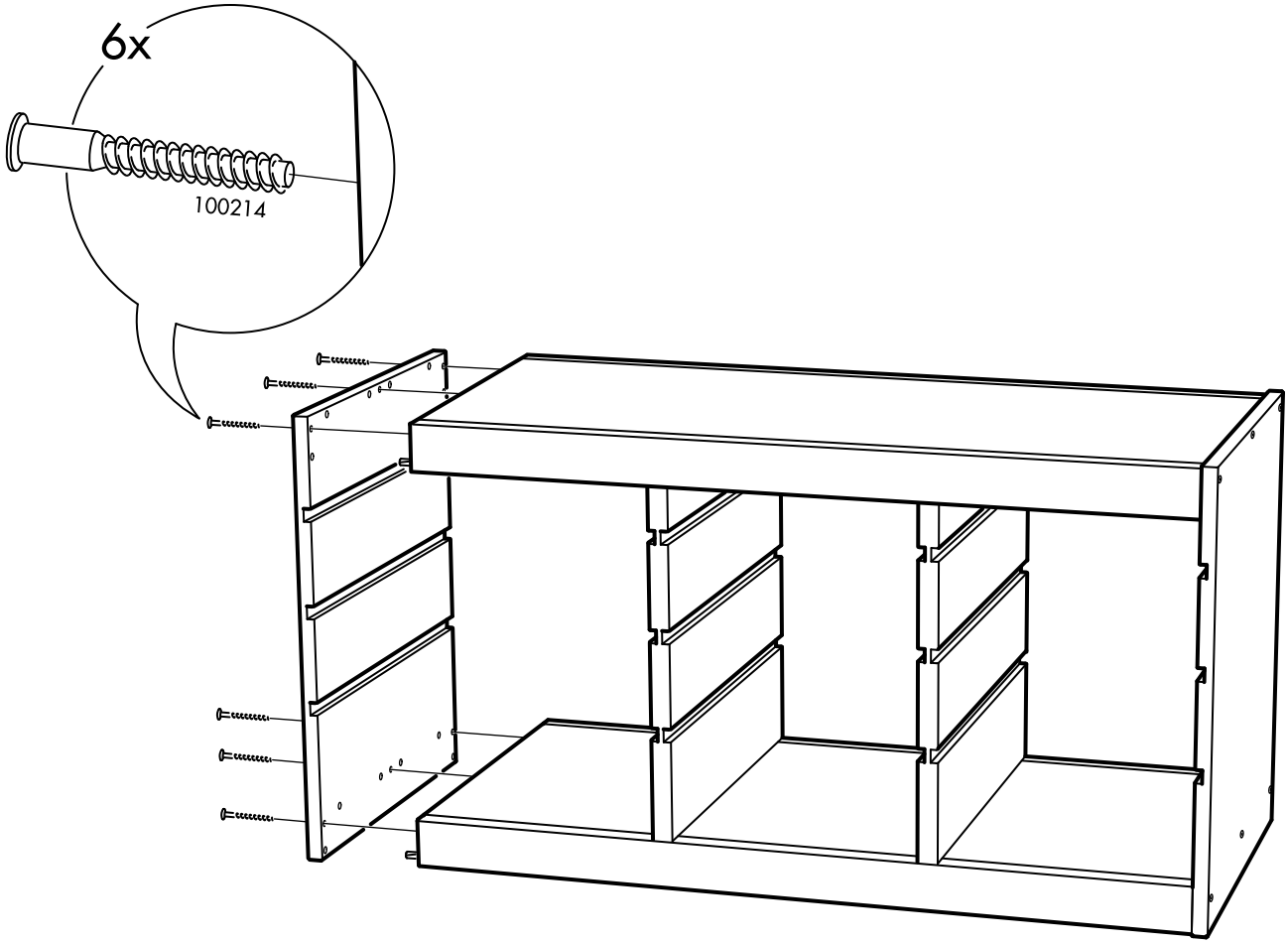

9

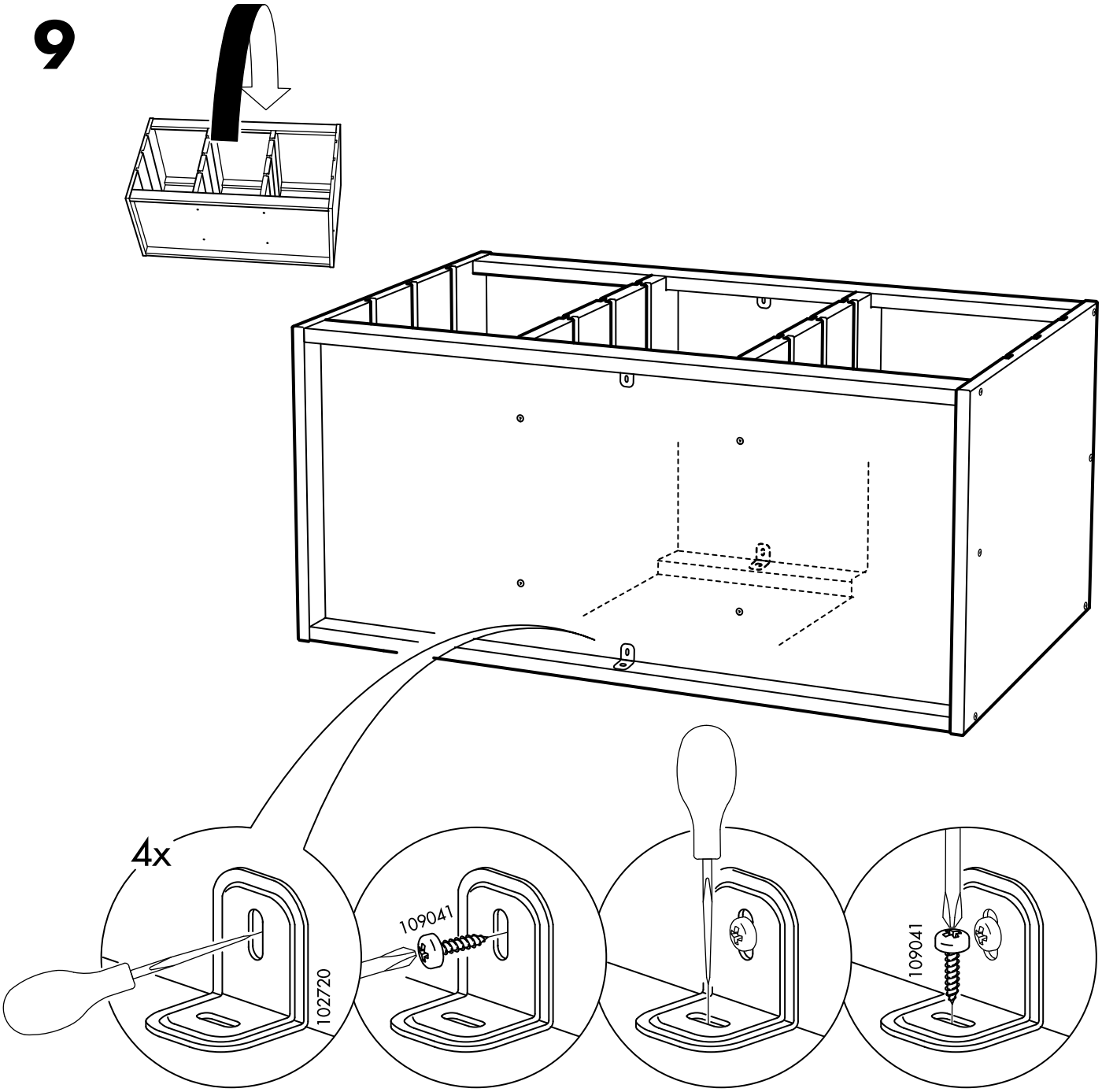

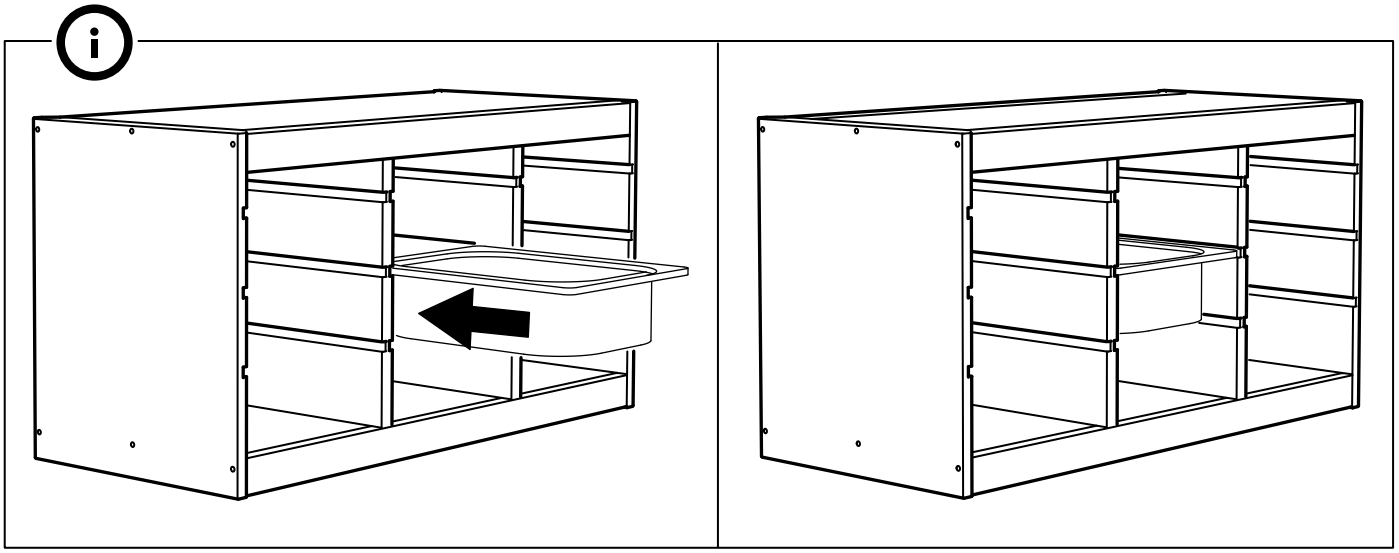

© Inter IKEA Systems B.V. 2011